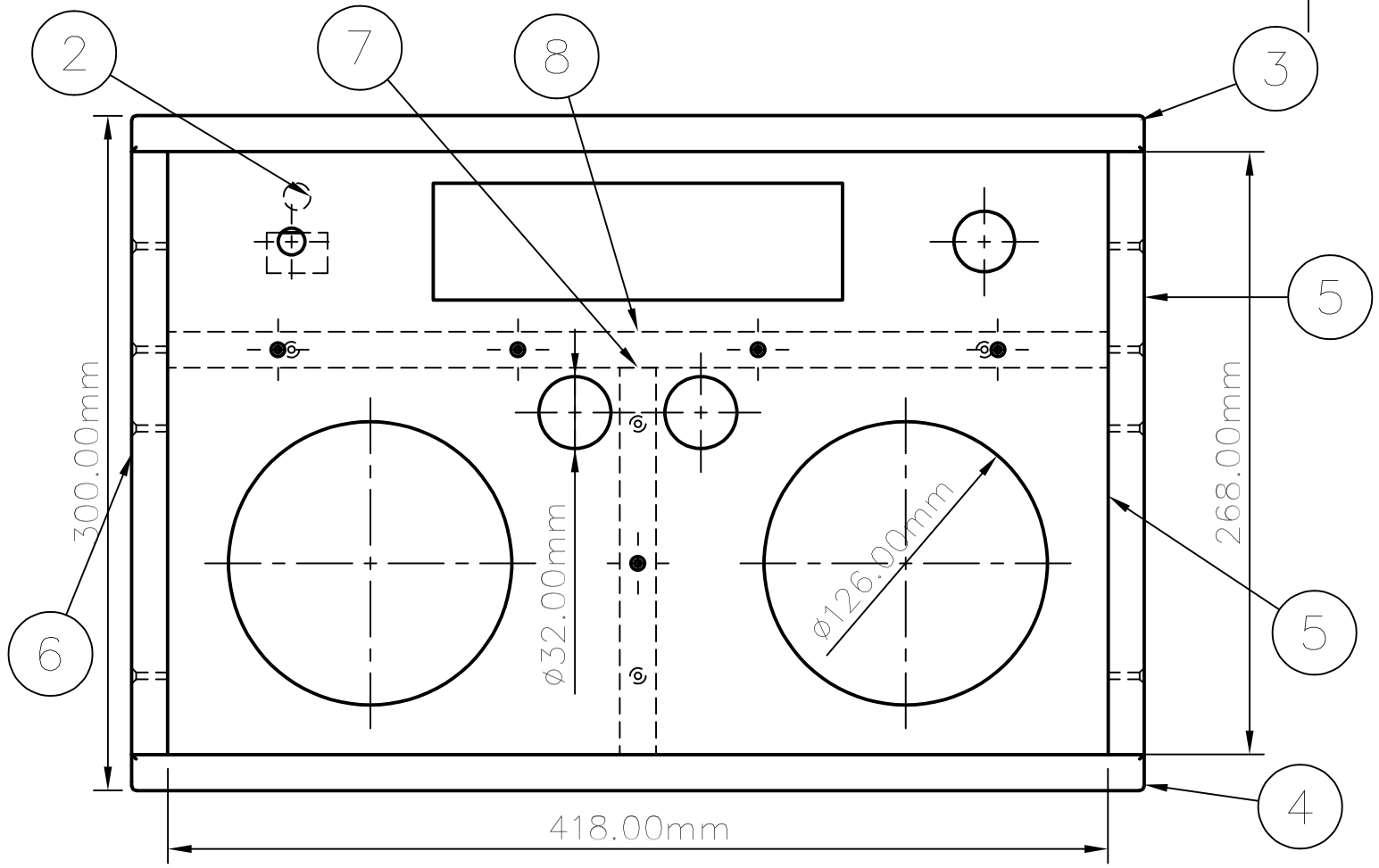

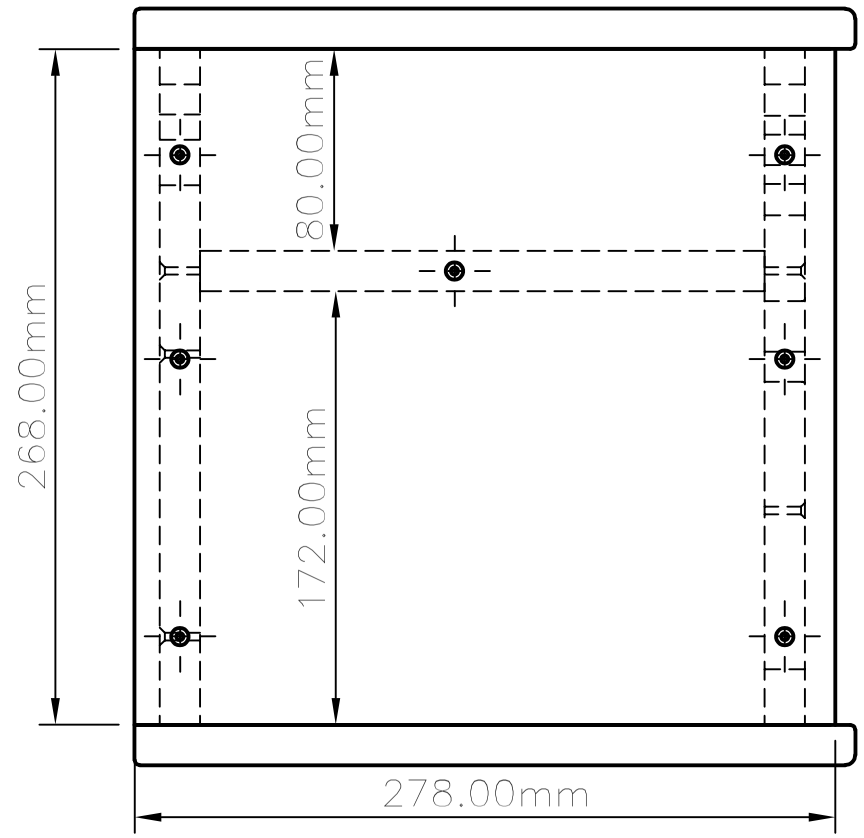

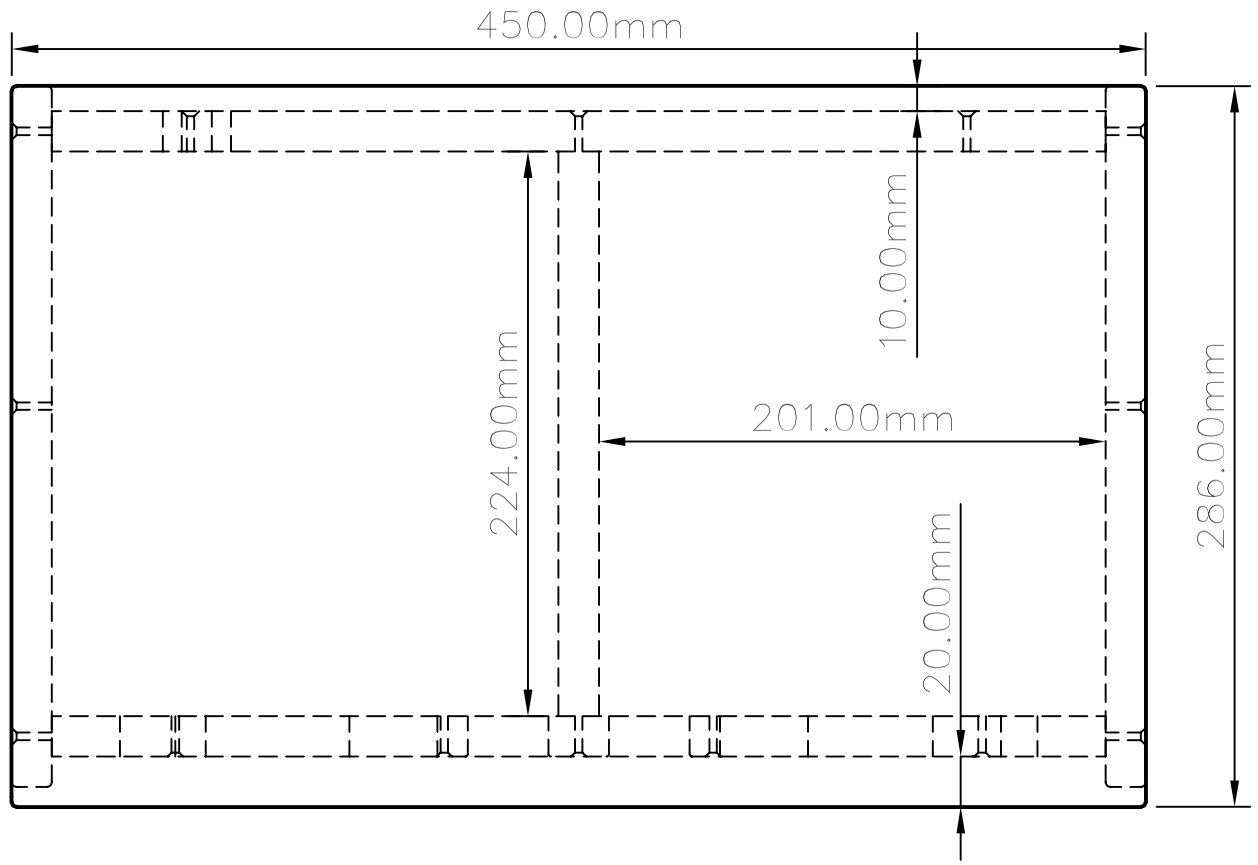

Parts List			
Item	Qty	Part Name	Description
1	1	SKATLA_spredaj	418 * 268 * 16 mm (MDF) / 2,48€
2	1	SKATLA_zadaj	418 * 268 * 16 mm (MDF) / 2,48€
3	1	SKATLA_pokrov	450 * 286 * 16 mm (MDF) / 2,85€
4	1	SKATLA_dno	450 * 286 * 16 mm (MDF) / 2,85€
5	1	SKATLA_desna	278 * 268 * 16 mm (MDF) / 1,65€
6	1	SKATLA_leva	278 * 268 * 16 mm (MDF) / 1,65€
7	1	PREGRADA_vertikala	224 * 172 * 16 mm (MDF) / 0,86€
8	1	PREGRADA_polica	418 * 224 * 16 mm (MDF) / 2,08€

Dept.	Technical reference	Created by Boris Bilc 4. 11. 2023	Approved by
		Document type	Document status
		Title MultiBox_Portable_ARI-II	DWG No.
			Rev. / Date of issue / Sheet 1/1